SM-15HD
MICROPILES

soilmec
Drilling and Foundation Equipment

The brand new SM-15HD is a versatile and powerfull machine.

A higher degree of flexibility, enhanced performance and low environmental impact are some of the key points our best selling micropiling rig new design.

SM-400
SM-401
SM-14

1500
units sold

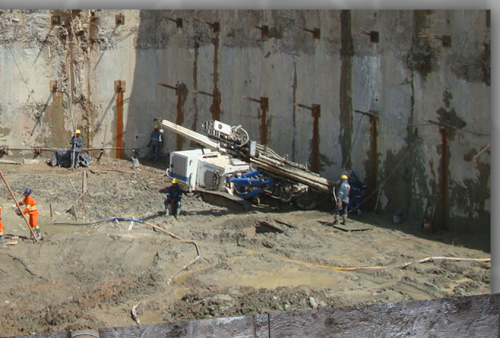

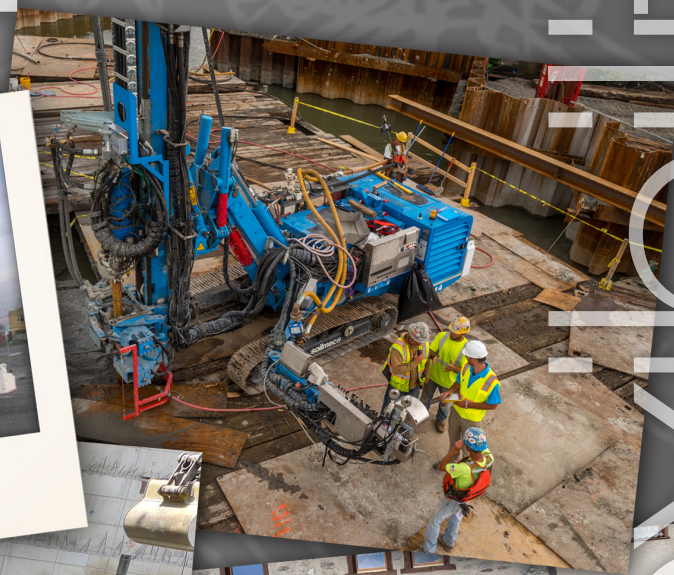

High power, high efficiency & low environmental impact.

Powered by the most advanced Cummins Diesel engines which meet the required emission standards in the different markets *(both Stage III and Stage V versions are available).*

These engines are set up with an automatic power control & fan speed system for improved performance and productivity; this system also ensures a low environmental impact due to the reduced noise, fuel consumption and carbon emissions.

The new soundproofed canopies are designed to minimize the sound level and increase accessibility during inspection and maintenance operations.

The rig is fitted with proportional hydraulic servo-assisted controls for smooth operations. Lower running costs and a reduction in the wear and tear of components thanks to the smart Load Sensing System installed.

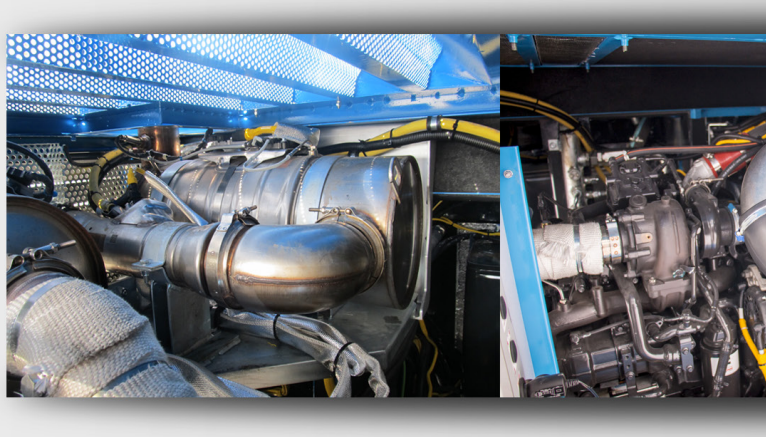

SM-15 and SM-15 HD.
A single platform.

The platform design approach allows us to produce two different rigs using many components in common.

The SM-15 HD is equipped with a larger more powerful Diesel engine for heavy duty works and a special undercarriage to increase performance in anchoring and jet grouting technologies.

The SM-15 HD is particulary suitable
to drill when using the double head system.

POWER

Versatility

Versatility & tailor made options to suit the different drilling technologies and customer needs.

A microdrilling machine easy to rig up and operate, shaped to perform even in the most extreme environments.

Nos. 3 different kinematic systems types:

- The cylinders and pins removal type;
- The slew ring type;
- Front of the wall joint type which allows to drill on the side of the tracks and reaching extreme confined spaces.

A range of rotary heads with different torques and drilling speeds to suit the various technologies.

A new double rotary head setup to ensure high performance in a compact size.

Easy to be converted to single head.

Rotary side shifting device even in double head setup.

Ergonomy

New hydraulic/proportional panel mounted on pivotal support arm for drilling operations: The controls are clearly laid out and located within easy reach to ensure smooth operations and enhanced safety.

The new layout designe increases operating speed for a better efficiency being easy and intuitive to use due to the controls and gauges grouped based on their function.

Optionally a full radio remote control for drilling, positioning and tramming.

Safety

The SM-15 HD are compliant with the latest international standards like:

- Hydraulic openable cages;
- Additional trip wires devices;
- Emergency stop buttons ;
- ROM and SPM operation modes.

The rig can be fitted with the new carousel loading system or with the hydraulic arm to handle up rods & casings in total safety and with excellent stability.

Connectivity

The rig is fitted with a the DMS on Board. The LCD display set on the side of the base machine is used for:

- Monitoring rig parameters;
- Download rig parameters ;
- Remote connection to the rig.

The machine is also connected to DMS Manager 4.0, the cloud running app for asset, fleet and site management.

Standard Configuration

All drawings are referred to 4300 mm (169 in) stroke mast.
Available 5300 mm (208.7 in) / 7000 mm (275.6 in) / 4000 mm (157.5 in) stroke mast.

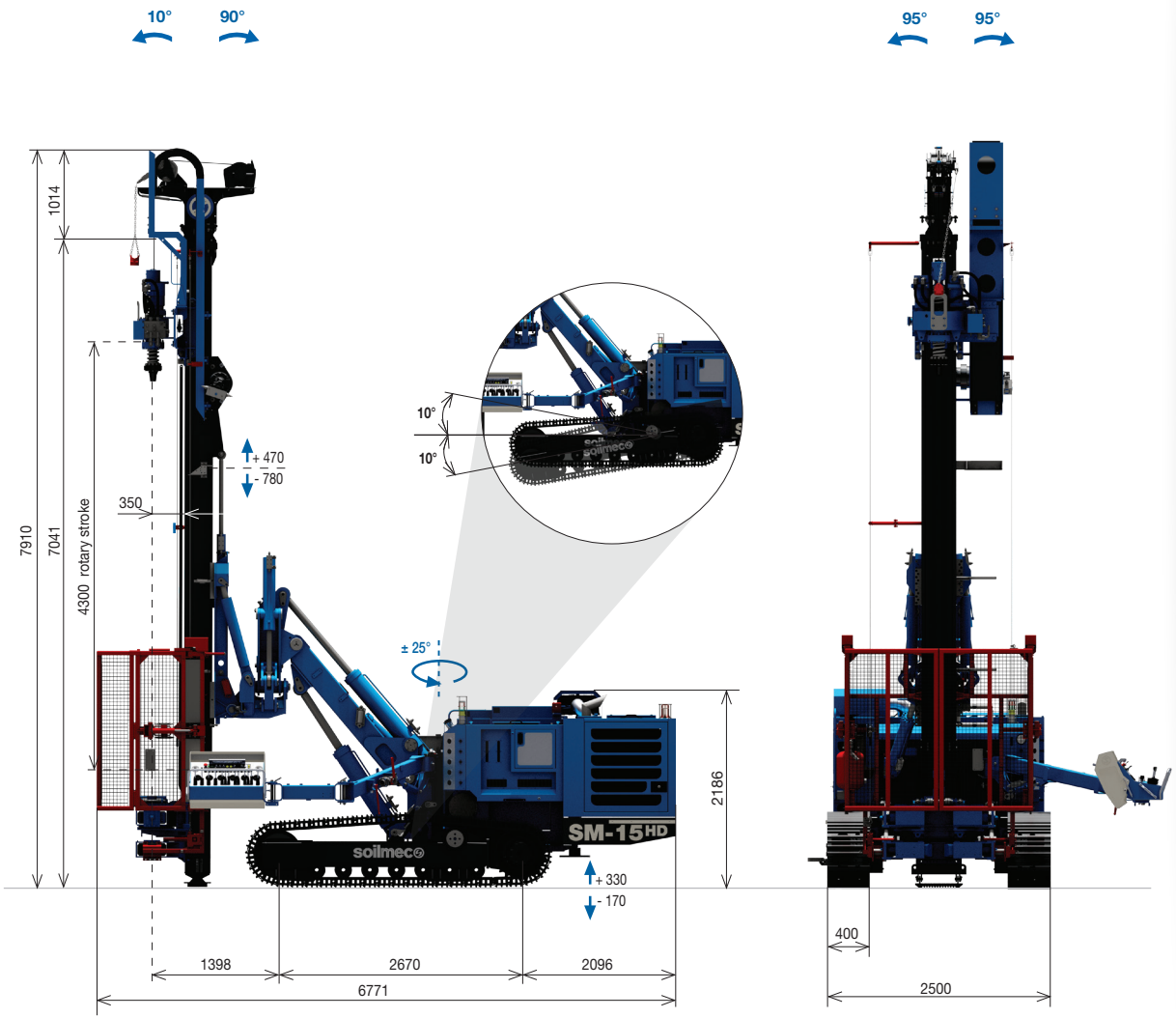

Drawing are not to scale All technical data are purely indicative and subject to change without notice

Movements

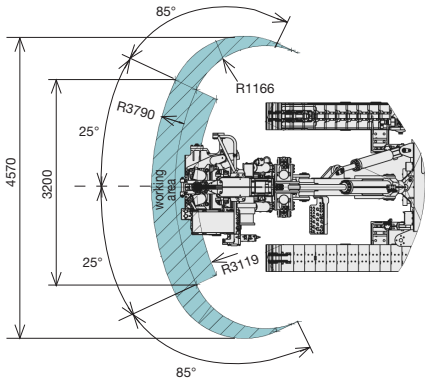

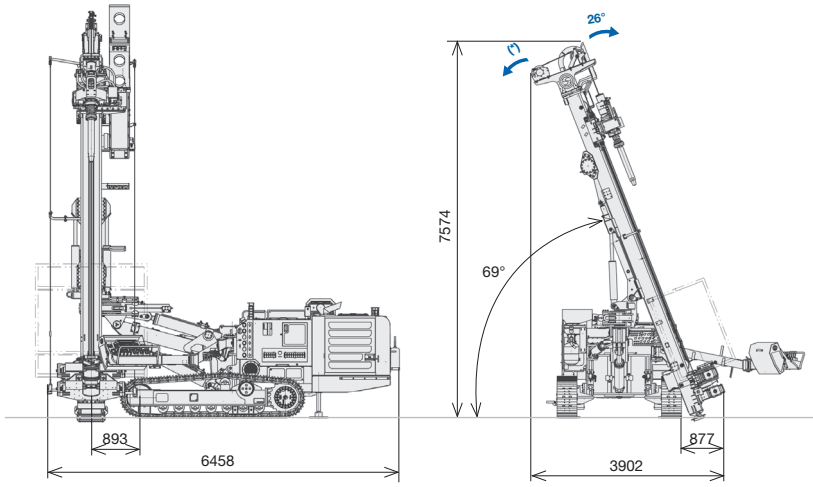

(*) *0° foot on ground / 69° foot not supported*

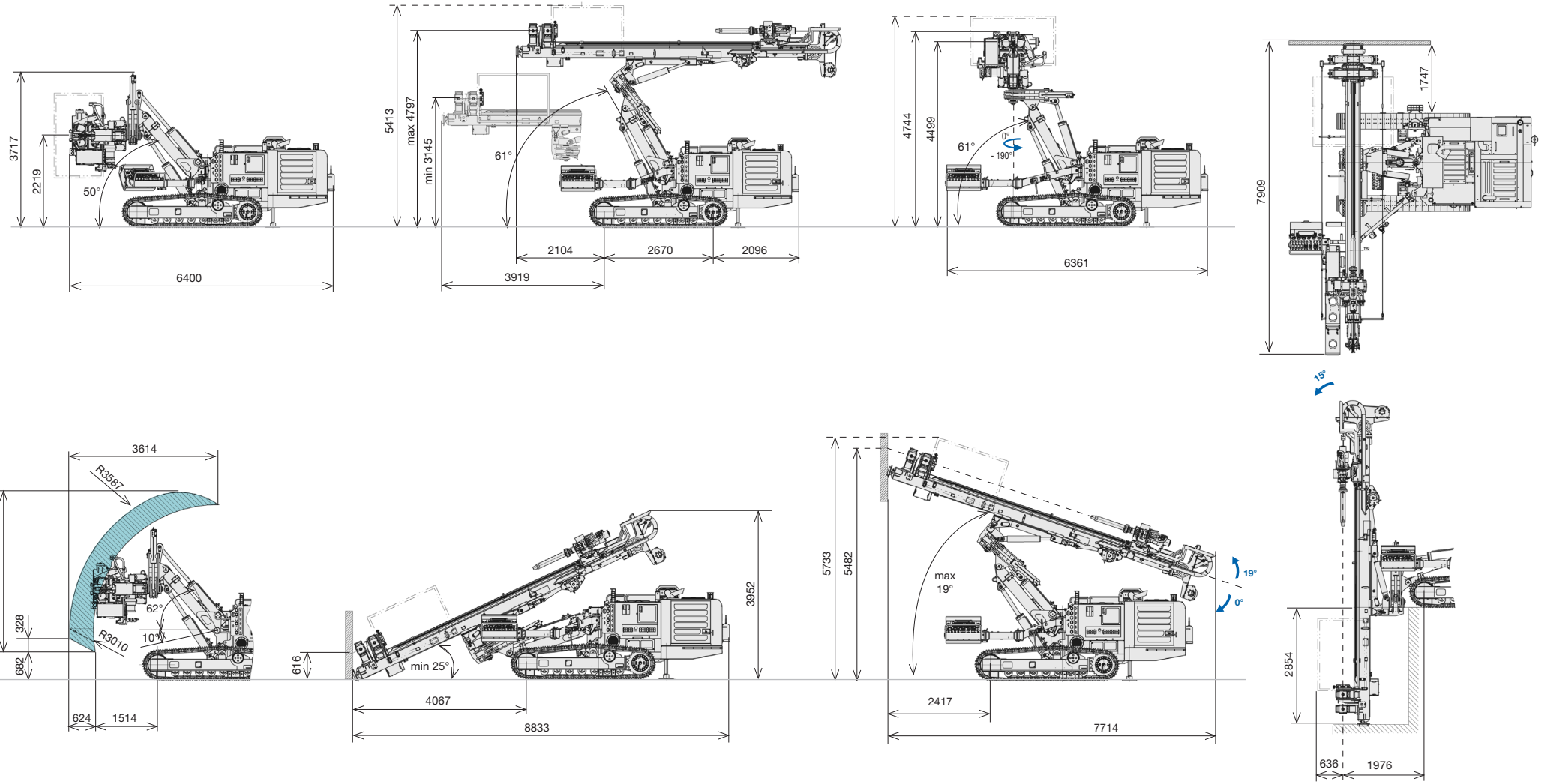
3717
2219
50°
6400
5413
max 4797
min 3145
61°
2104
2670
2096
3919
4744
4499
61°
0°
- 190°
6361
7909
1747
3614
R3587
4568
328
682
62°
10°
R3010
624
1514
616
min 25°
3952
4067
8833
5733
5482
max
19°
19°
0°
2417
7714
15°
2854
636
1976

Double rotary

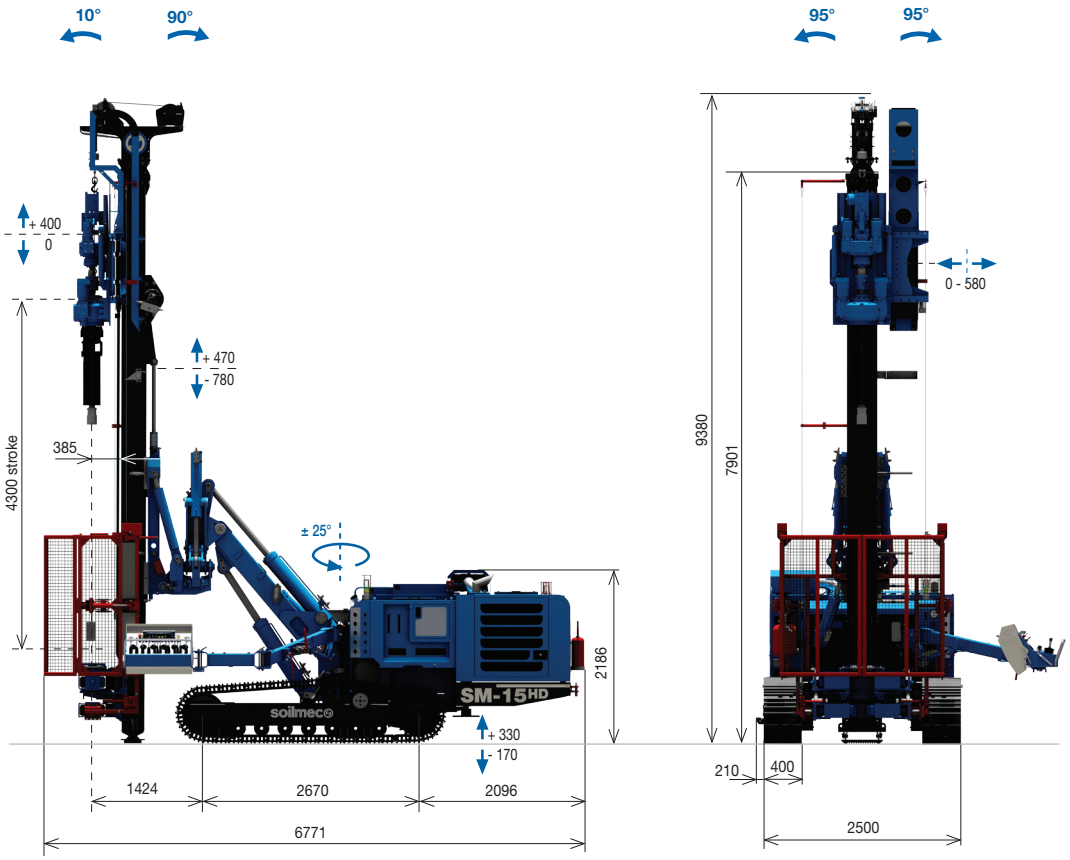

Hoist & Feed system	Motoreducer	*Motoreducer*
Feed Stroke	**5300 mm**	*208.7 in*
Maximum Hoist pull	**121 kN**	*27201 lbf*
Maximum Feed force	**121 kN**	*27201 lbf*
Rotary head	**Option 1**	
Model	**HT1700**	*HT1700*
Rotary type	**Upper rotary for rods**	*Upper rotary for rods*
Gear box type	**Variable**	*Variable*
Maximum torque	**1953 daNm**	*14405 lbf*ft*
Maximum rotation speed	**116 rpm**	*116 rpm*
Model	**HT3400**	*HT3400*
Rotary type	**Lower rotary for casing**	*Lower rotary for casing*
Gear box type	**Variable**	*Variable*
Maximum torque	**3348 daNm**	*24694 lbf*ft*
Maximum rotation speed	**58 rpm**	*58 rpm*
Rotary cradle side shifting *(single cradle for both rotaries)*	**580 mm**	*22.8 in*
Rotary relative shifting stroke	**400 mm**	*15.7 in*
Operating Weight *(w/o rod and casing)*	**19770 kg**	*43585 lb*
Rotary head	**Option 2**	
Model	**RH 10X**	*RH 10X*
Rotary type	**Upper rotary for rods**	*Upper rotary for rods*
Gear box type	**II gears**	*II gears*
Maximum torque	**1100 daNm**	*8113 lbf*ft*
Maximum rotation speed	**86 rpm**	*86 rpm*
Model	**RH 32X**	*RH 32X*
Rotary type	**Lower rotary for casing**	*Lower rotary for casing*
Gear box type	**II gears**	*II gears*
Maximum torque	**3200 daNm**	*23602 lbf*ft*
Maximum rotation speed	**44 rpm**	*44 rpm*
Rotary cradle side shifting *(single cradle for both rotaries)*	**580 mm**	*22.8 in*
Rotary relative shifting stroke	**400 mm**	*15.7 in*
Operating Weight (w/o rod and casing)	**19350 kg**	*42659 lb*

Drawing are not to scale All technical data are purely indicative and subject to change without notice

Jet grouting

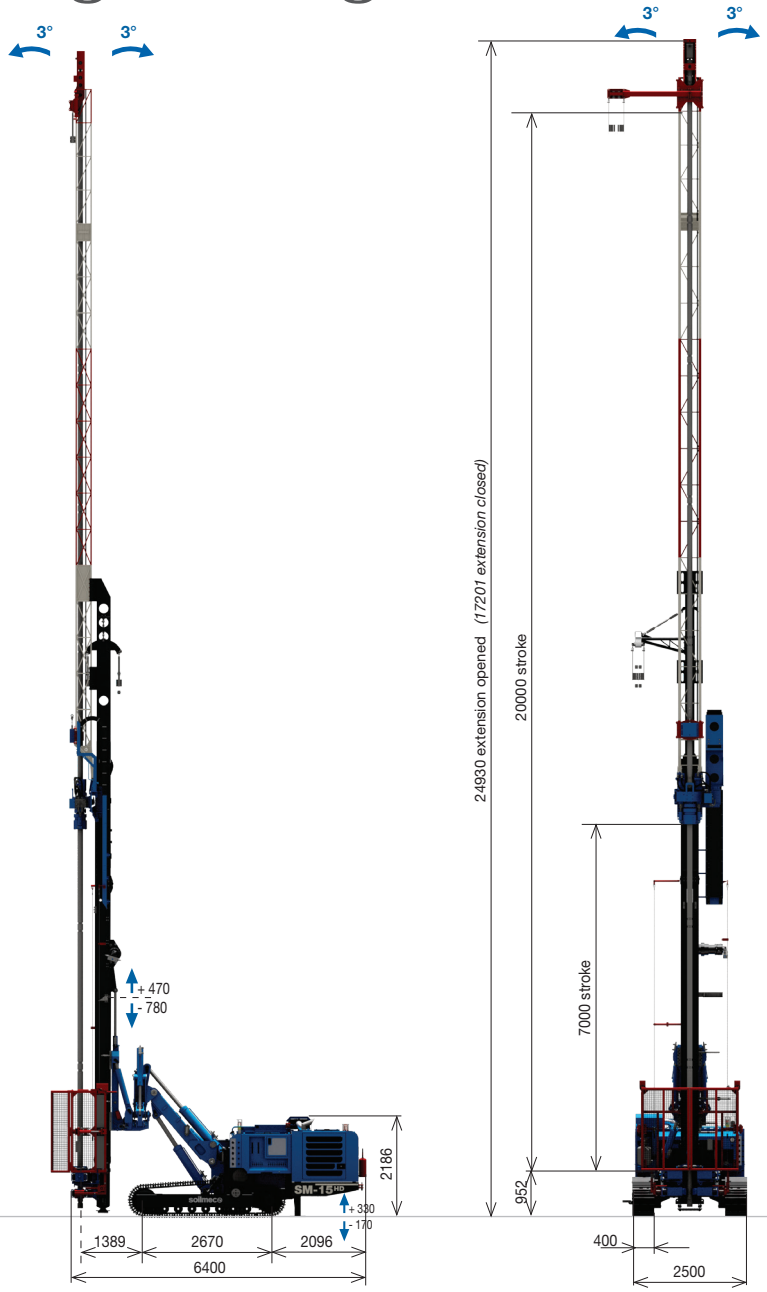

Operating Weight *(w/o rod and casing)*	**21100 kg**	*46518 lb*
Max treatment depth in a single passage *c/w 7000 mm (275.6 in) stroke mast*	**20 m**	*65.6 ft*
Telescopic mast extensions	**11,8 + 2,2 m**	*39 + 7 ft*
Hydraulic chuck max handing diameter	**114 mm**	*4.49 in*
Rotary head	**HT3700**	*HT3700*
Gear box type	**Variable**	*Variable*
Maximum torque	**3390 daNm**	*25003 lbf*ft*
Maximum rotation speed	**122 rpm**	*122 rpm*
Inner passage	**144 mm**	*5.7 in*
Special drilling axis	**385 mm**	*15.2 in*
Transport data		
Transport length	**11800 mm**	*464.6 in*
Transport width	**2500 mm**	*98.4 in*
Transport height *(c/w guard)*	**3270 mm**	*128.7 in*
Transport height *(guard partially dismounted)*	**2900 mm**	*114.2 in*
Transport height *(min for container)*	**2500 mm**	*98.4 in*

Drawing are not to scale All technical data are purely indicative and subject to change without notice

Technical data

Undercarriage

Undercarriage	±10° tilting gauge	*±10° tilting gauge*
Track shoe width	**400 mm**	*15.7 in*
Wheel base (centre idler to centre sprocket)	**2670 mm**	*105.1 in*
Overall length	**3396 mm**	*133.7 in*
Overall width (not extendable crawler)	**2500 mm**	*98 in*
Travelling speed	**1,6 km/h**	*1.0 mph*
Average ground pressure	**0,080 MPa**	*11.6 psi*
Ground stabilizers	**n°2 rear**	
Special transport width	**2300 mm**	*90.6 in*

Engine

Diesel Engine	Option 1	
Make and model	**CUMMINS B 6.7**	
Emission certification	**EU Stage V - US EPA Tier 4f**	
Diesel engine power rating	**186 kW @ 2000 rpm**	*249 HP @ 2000 rpm*
Max Diesel engine power	**330 l**	*87 US gal*

Diesel Engine	Option 2	
Make and model	**CUMMINS B 6.7**	
Emission certification	**EU Stage III - US EPA Tier 3**	
Diesel engine power rating	**179 kW @ 2000 rpm**	*240 HP @ 2000 rpm*
Fuel tank capacity	**330 l**	*87 US gal*

Hydraulic system

Hydraulic system		
Main pumps: variable axial pumps	**214 + 214 l/min**	*57 + 57 US gal/min*
Auxiliary pumps: gear pumps	**52 + 22 x 2 + 126 + 108 l/min**	*13.7 + 6 x 2 + 33 + 29 US gal/min*
Hydraulic oil tank capacity	**510 l**	*135 US gal*

Rotary

Rotary head	HD1200V		HD1400V	
Gear box type	**Variable**	*Variable*	**Variable**	*Variable*
Maximum torque	**1207 daNm**	*8902 lbf*ft*	**1356 daNm**	*10001 lbf*ft*
Maximum rotation speed	**277 rpm**	*277 rpm*	**229 rpm**	*229 rpm*
Inner passage	**124 mm**	*4.9 in*	**124 mm**	*4.9 in*

Rotary head	HT1300G		HR-16	
Gear box type	**III Gears**	*III Gears*	**II Gears**	*II Gears*
Maximum torque	**1280 daNm**	*9441 lbf*ft*	**1570 daNm**	*11580 lbf*ft*
Maximum rotation speed	**433 rpm**	*433 rpm*	**145 rpm**	*145 rpm*
Inner passage	**124 mm**	*4.9 in*	**117 mm**	*4.6 in*

Rotary head	HR-21G		HT3700	
Gear box type	**II Gears + Variable**	*II Gears + Variable*	**Variable**	*Variable*
Maximum torque	**1140 daNm**	*8408 lbf*ft*	**3390 daNm**	*25003 lbf*ft*
Maximum rotation speed	**446 rpm**	*446 rpm*	**122 rpm**	*122 rpm*
Inner passage	**130 mm**	*5.1 in*	**144 mm**	*5.7 in*

Clamp & breaker

Clamp & hydraulic joint breaker	Option 1	
Nominal size	**50 - 315 mm**	*2 - 12.4 in*
Maximum clamping force	**266 kN**	*59798 lbf*
Maximum breaking torque	**5060 daNm**	*37321 lbf*ft*
Extractor Device stroke	**600 mm**	*24 in*
Extractor Device force	**100 kN**	*22481 lbf*

Clamp & hydraulic joint breaker	Option 2	
Nominal size	**60 - 415 mm**	*2.4 - 16.3 in*
Maximum clamping force	**266 kN**	*59798 lbf*
Maximum breaking torque	**5060 daNm**	*37321 lbf*ft*
Extractor Device stroke	**600 mm**	*24 in*
Extractor Device force	**100 kN**	*22481 lbf*

Clamp & hydraulic joint breaker	Option 3	
Nominal size No.2 set jaws	**45-415 / 180-520 mm**	*1.8-16.5 / 7.1-20.5 in*
Maximum clamping force	**266 kN**	*59798 lbf*
Maximum breaking torque	**6740 daNm**	*49712 lbf*ft*

Service winch

Service winch	controlled descent	*controlled descent*
1°layer line pull	**20 kN**	*4496 lbf*
Rope diameter	**10 mm**	*0.4 in*
Rope speed	**47 m/min**	*154 ft/min*

Rod carousel

Rod carousel	Option 1	
N°of rods	**10**	*10*
Rod diameters	**114 mm**	*4 in*
Rod length	**3000 mm**	*118 in*

Rod carousel	Option 2	
N°of rods	**5**	*5*
Rod diameters	**140 mm**	*6 in*
Rod length	**3000 mm**	*118 in*

Rod carousel	Option 3	
N°of rods	**3**	*3*
Rod diameters	**114 mm**	*4 in*
Rod length	**3000 mm**	*118 in*

Hoist & Feed

Hoist & Feed system	Option 1	
Type	**Monolithic mast Cylinder Crowd System**	*Monolithic mast Cylinder Crowd System*
Feed Stroke	**4000 mm**	*157.5 in*
Maximum Hoist pull	**89 kN**	*20008 lbf*
Maximum Feed force	**45 kN**	*10116 lbf*
Hoist & Feed system	**Option 2**	
Type	**Modular Mast Motoreducer Crowd System**	*Modular Mast Motoreducer Crowd System*
Feed Stroke	**4300 mm**	*169.3 in*
Maximum Hoist pull	**121 kN**	*27201 lbf*
Maximum Feed force	**121 kN**	*27201 lbf*
Hoist & Feed system	**Option 3**	
Type	**Modular Mast Motoreducer Crowd System**	*Modular Mast Motoreducer Crowd System*
Feed Stroke	**5300 mm**	*208.7 in*
Maximum Hoist pull	**121 kN**	*27201 lbf*
Maximum Feed force	**121 kN**	*27201 lbf*
Hoist & Feed system	**Option 4**	
Type	**Modular Mast Motoreducer Crowd System**	*Modular Mast Motoreducer Crowd System*
Feed Stroke	**7000 mm**	*275.6 in*
Maximum Hoist pull	**121 kN**	*27201 lbf*
Maximum Feed force	**121 kN**	*27201 lbf*

(for vertical drilling application)

Modular mast allowing for different lenghts and strokes.

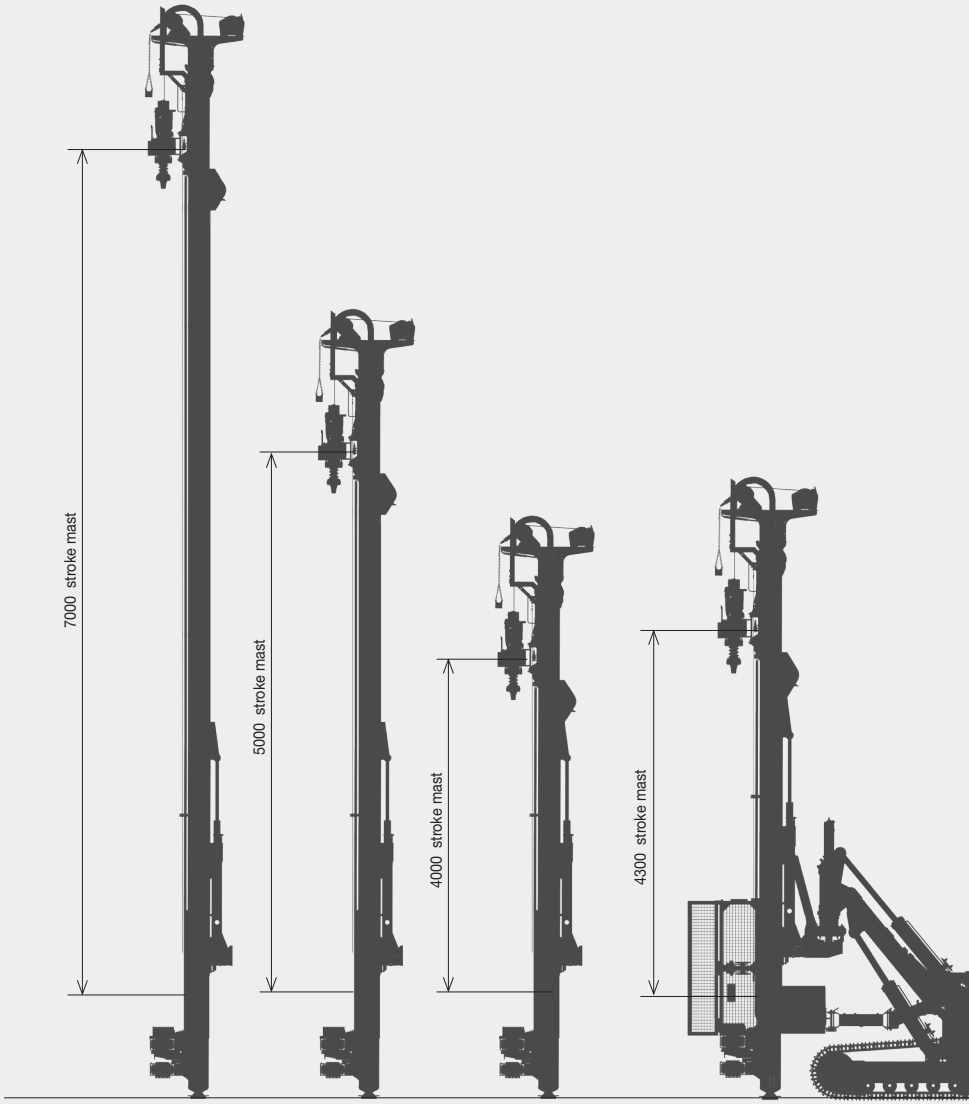

Transport

standard version
4300 mm / 169 in stroke

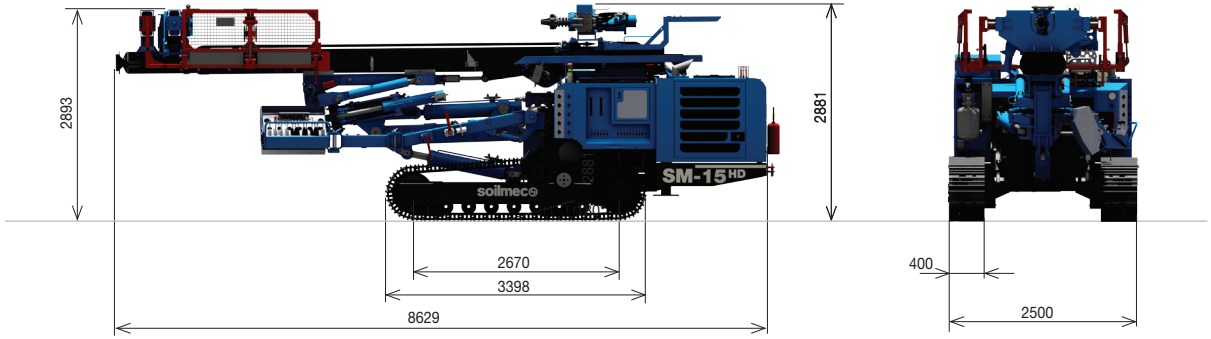

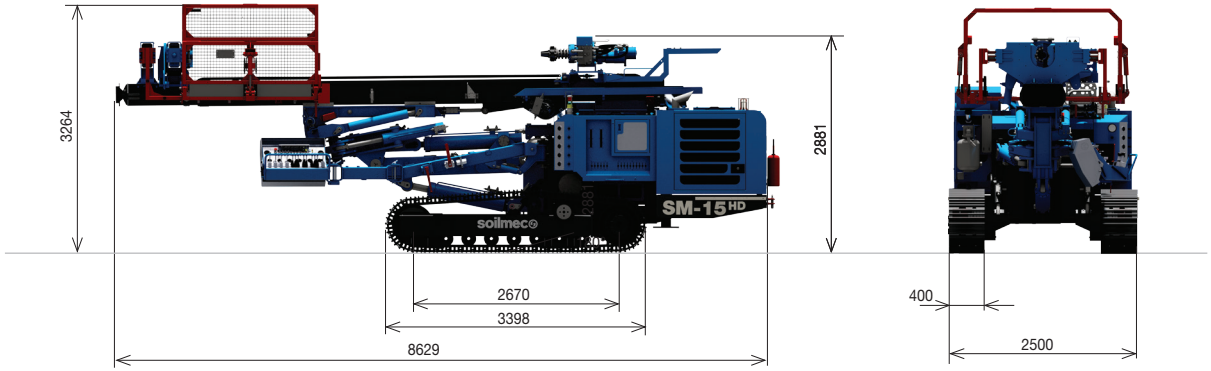

compact version
4300 mm / 169 in stroke

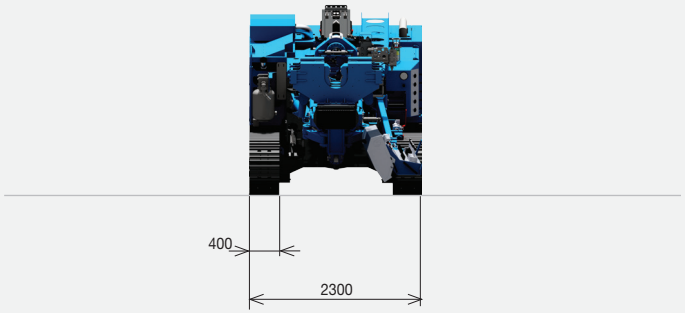

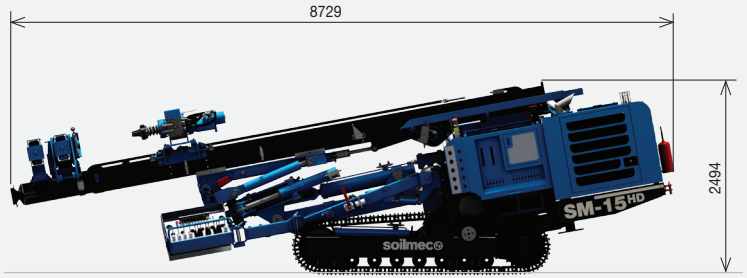

Trasport kit for container shipment

Transport	c/w guard		partial guard		compact	
Transport width	**2500 / 2300 mm**	*98.4 / 90.6 in*	**2500 / 2300 mm**	*98,4 / 90.6 in*	**2500 / 2300 mm**	*98.4 / 90.6 in*
Transport height	**3270 mm**	*128.7 in*	**2893 mm**	*113.9 in*	**2881 mm**	*113.4 in*
Transport weight	**18400 kg**	*40565 lb*	**18325 kg**	*40400 lb*	**18000 kg**	*39683 lb*

Drawing are not to scale All technical data are purely indicative and subject to change without notice

Configurations

Upper frame complete with slew ring for 360° rotation	●
Radio remote control for tramming and positioning	●
Wired remote control for tramming only	●
Full radio remote control	○
7" LCD monitor for alarms & Diesel engine control and DMS connectivity	●
Hydraulic and proportional controls for all operations	●
Modular mast with 4300 mm (169.3 in) stroke	●
Mast extension kits for 5,3 -7 m stroke (208.7 - 286.6 in)	○
Auxiliary winch, 20 kN (4469 lbf)	○
Clamp & breaker 50-315 mm (1.96 - 12.4 in)	○
Clamp & breaker 60-415 mm (2.4 - 16.4 in)	○
Kinematic mechanism - Sliding mast with 1250 mm (49 in) stroke	●
Kinematic mechanism - 90° joint	●
Kinematic mechanism - Cylinder & pin removal	○
Kinematic mechanism - ± 180° motoreducer	○
Diesel engine EU Stage V - US EPA Tier 4f	●
Diesel engine EU S tage III - US EPA Tier 3	○
Load sensing hydraulic system	●
Hydraulic prearrangement for auxiliary pumps	●
Rotary cradle, complete with pads, wich can be shifted by an hydraulic cylinder, 600 mm (23.6 in) stroke	○
Rotary cradle, complete with pads, wich can be shifted by an hydraulic cylinder, 450 mm (18 in) stroke	●
Floating system for rotary head	○
Air/water system and line lubricator for DTH	○
Foam pump c/w gauge pressure and safety valve	●
Water & mud pumps	○
Centering device	○
Slow rotation kit and special protective mode	●
Hydraulic safety cage kit driven by cylinder	●
Lighting system on mast	●
Washing kit including with hose rewinder & washing lance	○
Fire extinguisher	●
Rod carousel (3 rods)	○
Rod carousel (5-10 rods)	○
Hydraulic crane 200 kg @ 6 m (441 lb @ 20 ft)	○
Double rotary kit	○
Jet grouting kit, single fluid	○
Jet grouting kit, double fluid	○
Hydraulic chuck complete with gauge pressure and safety device	○
Telescopic extension for jet grouting	○
Transport kit for telescopic mast	○
Hydraulic prearrangement for Jet Grouting	○
Wedge kit for hydraulic chuck for 114-90-76 mm	○

● standard ○ optional n.a. not available

www.soilmec.it

This brochure has been edited and distributed by SOILMEC Spa. The present document cancels and override any previous ones. This brochure shall not be distributed, reproduced or exhibited without SOILMEC Spa. authorization in accordance with to SOILMEC web site disclaimer condition.

SOILMEC Spa distributes machinery and structures all over the world, supported by SOILMEC Spa subsidiary companies and dealers.
The complete Soilmec network list is available on the web site www.soilmec.it

#muddyboots

Technical daa sheet SM-15 HD- EN - 001- 02/2020